BAND PASS FILTER 1502 Hz

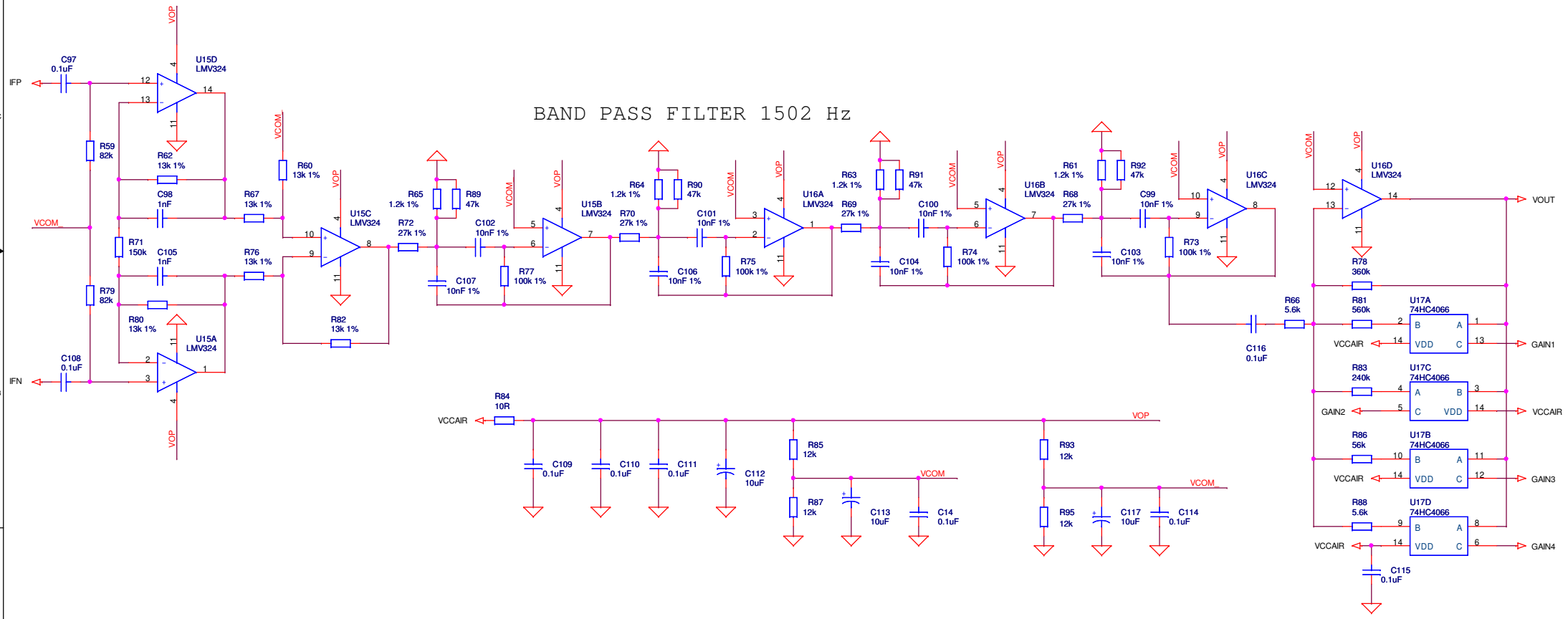

Title	Rig Expert AA 170	
Size A3	Document Number REU.RMHF21	Rev 01
Date: Wednesday, February 06, 2013	Sheet 3 of 3	